Ece 232

Lab1 supplementary notes:

LM741

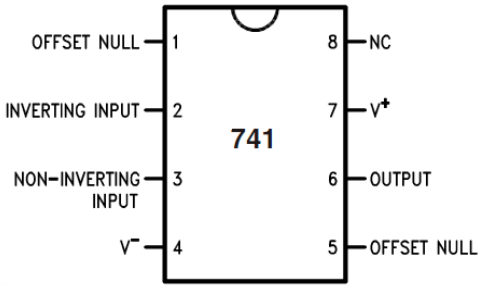

1)

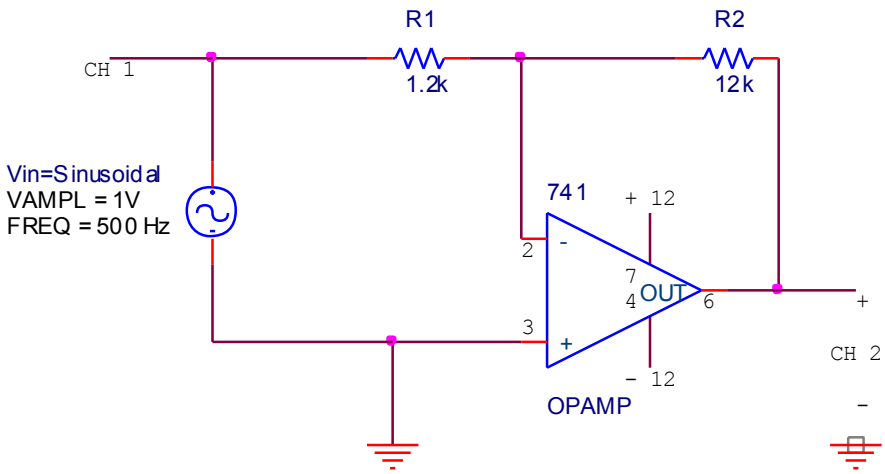

$$\frac{V_{in} - A}{R_1} = \frac{A - V_{out}}{R_2}, \quad A = 0\ Volt$$

$$V_{out} = -10V_{in}$$

$$if\ V_{in}(t) = Sin(2\pi ft)\ then\ V_{out}(t) = -10Sin(2\pi ft)$$

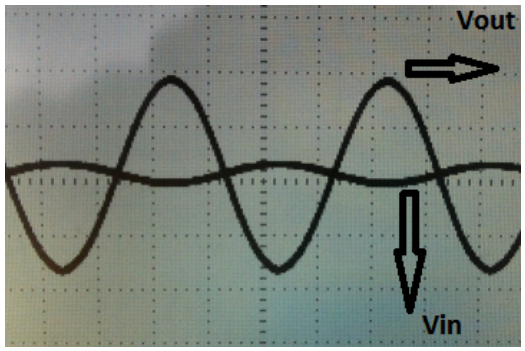

2)

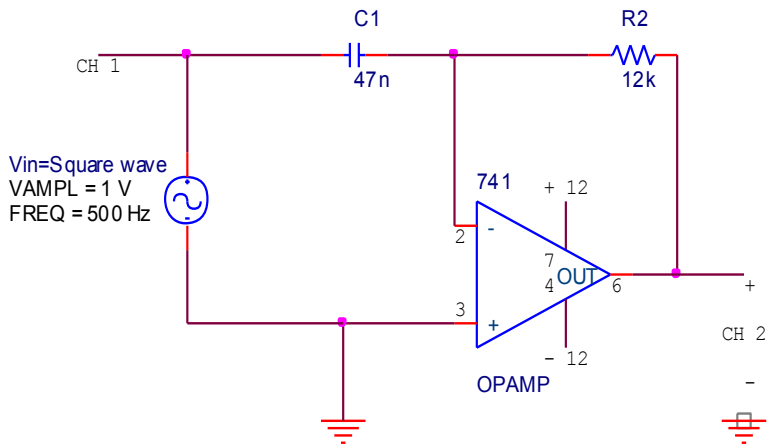

$$C_1 \frac{d(V_{in} - A)}{dt} = \frac{A - V_{out}}{R_2}$$

$$V_{out} = -C_1 R_2 \frac{dV_{in}}{dt}$$

$$C_1 R_2 = 564 \times 10^{*6}$$

a) If $V_{in}(t) = Sqr(ft)$ (square wave with frequency f and period T)

$$V_{in}(t) = \left\{ \begin{array}{ll} 1\,Volt, & 0 \le t \le \frac{T}{2} \\ -1\,Volt, & \frac{T}{2} \le t \le T \end{array} \right\} \text{(square wave)}$$

$$V_{out}(t) = \left\{ \begin{array}{l} -564 \times 10^{-6} \delta(t - n\frac{T}{2}),\, n\ even \\ -564 \times 10^{-6} \delta(t - n\frac{T}{2}),\, n\ odd \end{array} \right\} \text{(impulse train)}$$

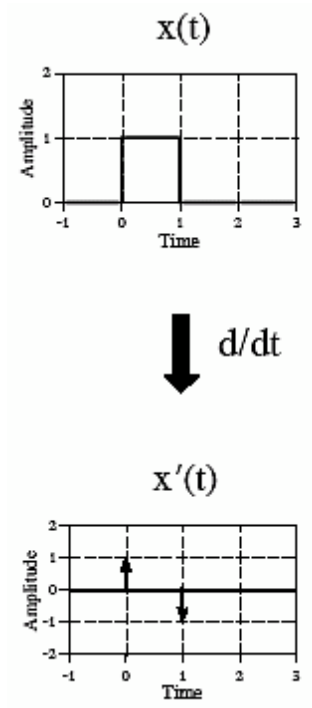

b) If $V_{in}(t) = Tri(ft)$ (triangular wave with frequency f and period T)

$$V_{in}(t) = \left\{ \begin{array}{ll} \frac{4}{T}t, & 0 \le t \le \frac{T}{4} \\ -\frac{4}{T}t + 2, & \frac{T}{4} \le t \le \frac{3T}{4} \\ \frac{4}{T}t - 4, & \frac{3T}{4} \le t \le T \end{array} \right\} \text{(triangular wave)}$$

$$V_{out}(t) = \left\{ \begin{array}{ll} -564 \times 10^{-6}\frac{4}{T}, & 0 \le t \le \frac{T}{4} \\ 564 \times 10^{-6}\frac{4}{T}, & \frac{T}{4} \le t \le \frac{3T}{4} \\ -564 \times 10^{-6}\frac{4}{T}, & \frac{3T}{4} \le t \le T \end{array} \right\} \text{(square wave)}$$

Example: If f=500Hz and T=2 msec

$$V_{out}(t) = \left\{ \begin{array}{ll} -1.128\,Volt, & 0 \le t \le \dfrac{T}{4} \\ 1.128\,Volt, & \dfrac{T}{4} \le t \le \dfrac{3T}{4} \\ -1.128\,Volt, & \dfrac{3T}{4} \le t \le T \end{array} \right\}$$

3.)

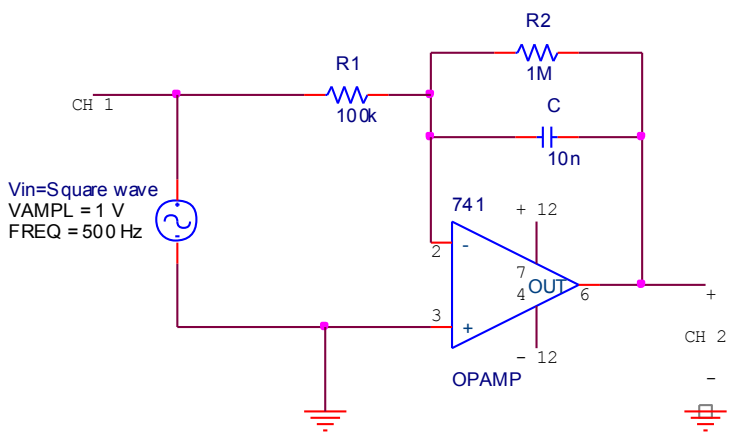

$$\frac{V_{in} - A}{R_1} = \frac{A - V_{out}}{R_2} + C\frac{d(A - V_{out})}{dt}$$

Since R_2 is very high the above equation can be written as,

$$\frac{V_{in} - A}{R_1} \cong C\frac{d(A - V_{out})}{dt}$$

Putting A=0 Volt we will have

$$\frac{dV_{out}}{dt} = -1000V_{in}$$

If the applied input is a square wave

$$V_{in}(t) = \left\{ \begin{array}{ll} 1\,Volt, & 0 \le t \le \dfrac{T}{2} \\ -1\,Volt, & \dfrac{T}{2} \le t \le T \end{array} \right\}$$ where $V_{in}(t)$ is periodic with period T

$V_{in} = 1 \; when \; 0 \le t \le \frac{T}{2} \; hence$

$$\frac{dV_{out}}{dt} = -1000$$

$$V_{out}(t) = -1000t + X$$

Assuming $V_{out}(0)$=V Volt and f=500 Hz

$$V_{out}(t) = -1000t + V$$

$$V_{out}(\frac{T}{2}) = -1000\frac{T}{2} + V = -1000\frac{1}{500 \times 2} + V = V - 1$$

$V_{in} = -1 \; when \; \frac{T}{2} \le t \le T \; hence$

$$\frac{dV_{out}}{dt} = 1000$$

$$V_{out}(t) = 1000t + X$$

Knowing that $V_{out}(0.5T)$=V-1 Volt and f=500 Hz

$$V_{out}(t) = 1000t + V - 2$$

As the results

$$V_{out}(t) = \left\{ \begin{array}{ll} -1000t + V \; Volt, & 0 \le t \le \frac{T}{2} \\ 1000t + V - 2 \; Volt, & \frac{T}{2} \le t \le T \end{array} \right\}$$ where $V_{in}(t)$ is periodic with period T where

$$T = \frac{1}{f} = \frac{1}{500} = 2m\sec$$

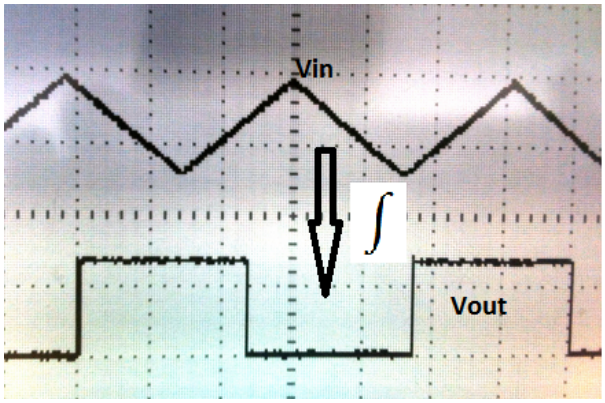

Graphs

1) Inverting amplifier

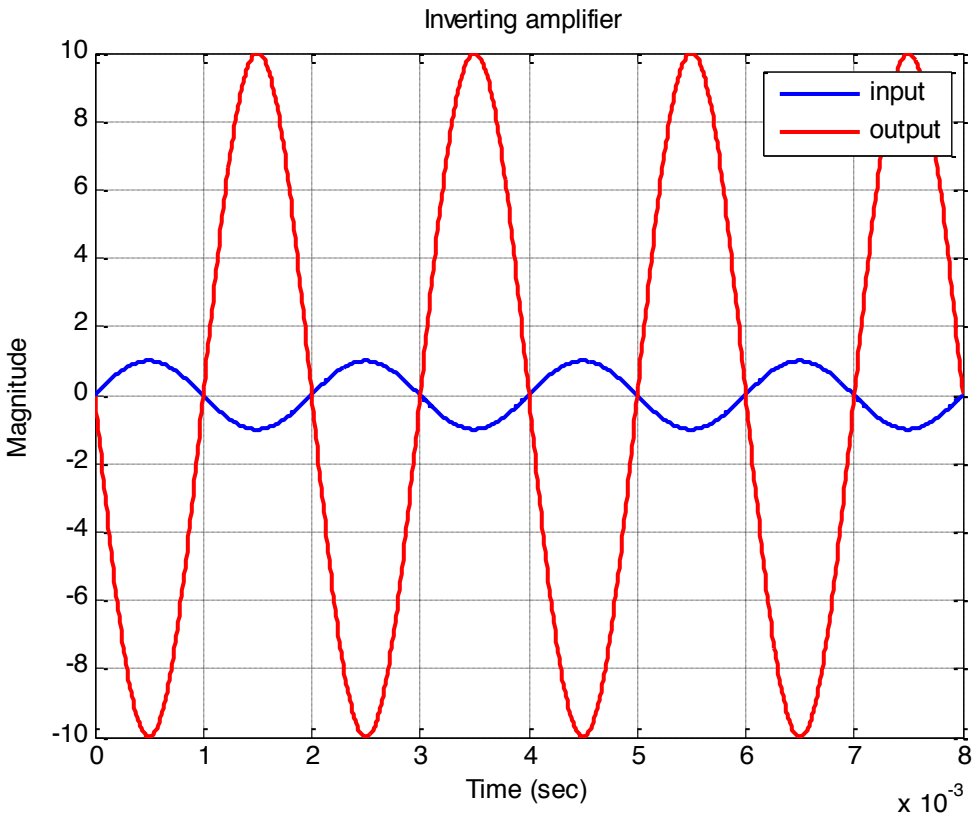

2a) Differentitor (input is square wave)

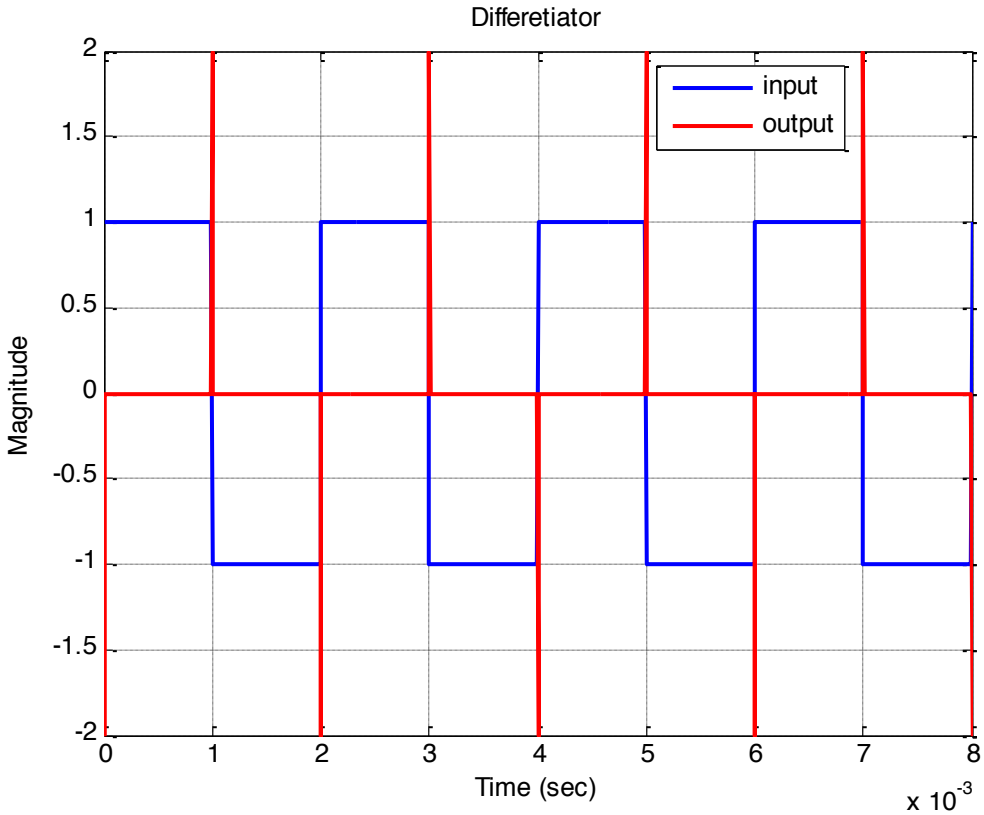

2b) Differetiator (iput is triangular wave)

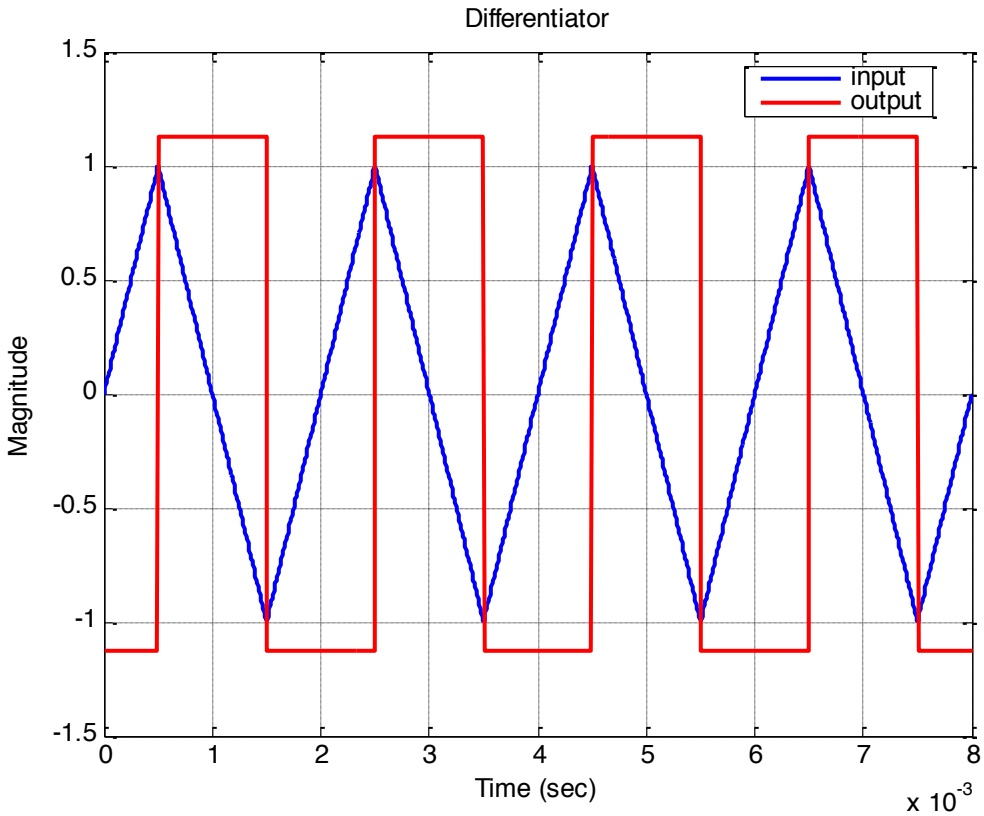

3) Integrator